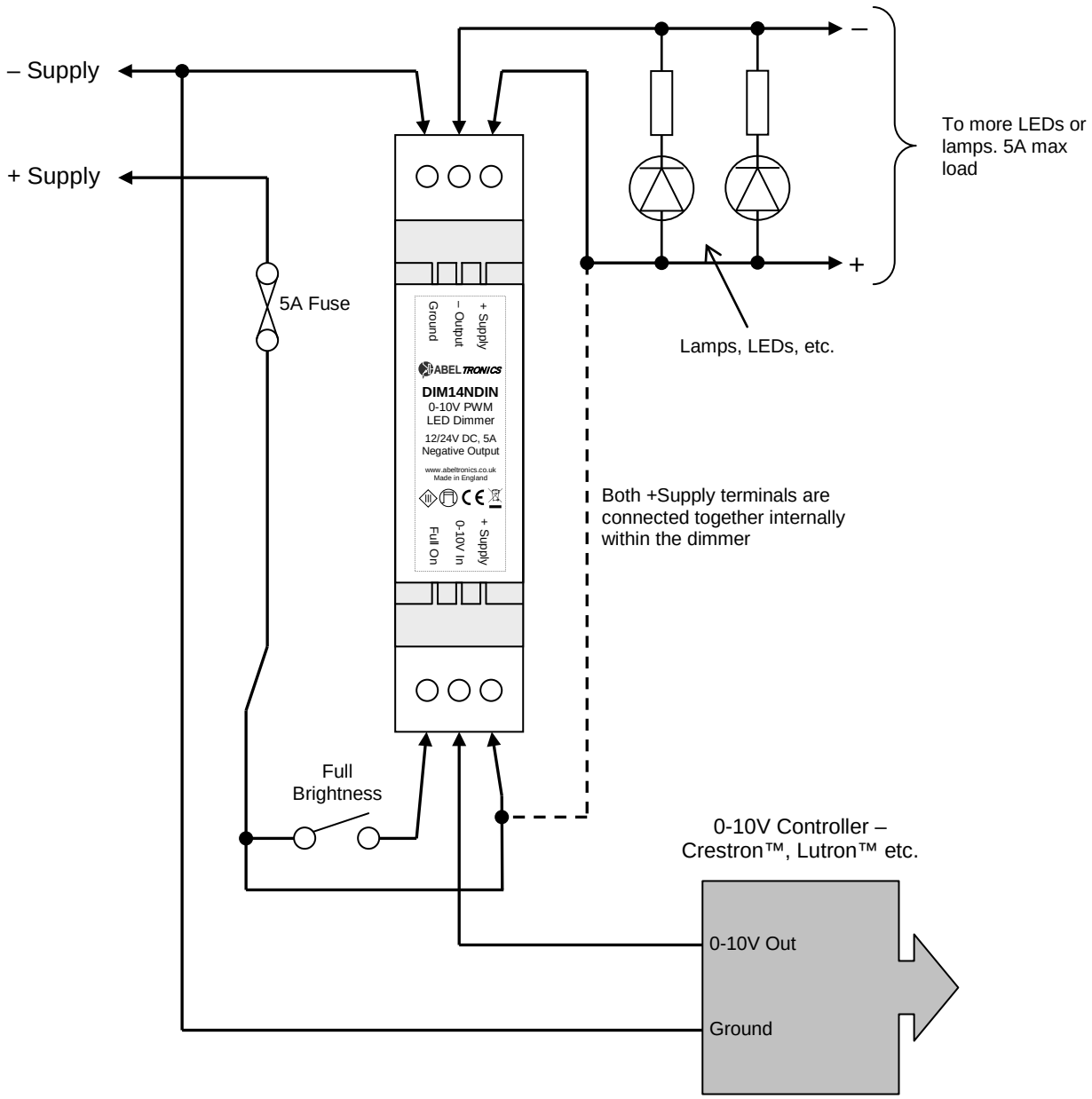
– Supply
+ Supply
5A Fuse
Ground
– Output
+ Supply
ABELTRONICS
DIM14NDIN
0-10V PWM
LED Dimmer
12/24V DC, 5A
Negative Output
www.abeltronics.co.uk
Made in England
Full On
0-10V In
+ Supply
–
+
To more LEDs or lamps. 5A max load
Lamps, LEDs, etc.
Both +Supply terminals are connected together internally within the dimmer
Full Brightness
0-10V Controller – Crestron™, Lutron™ etc.
0-10V Out
Ground