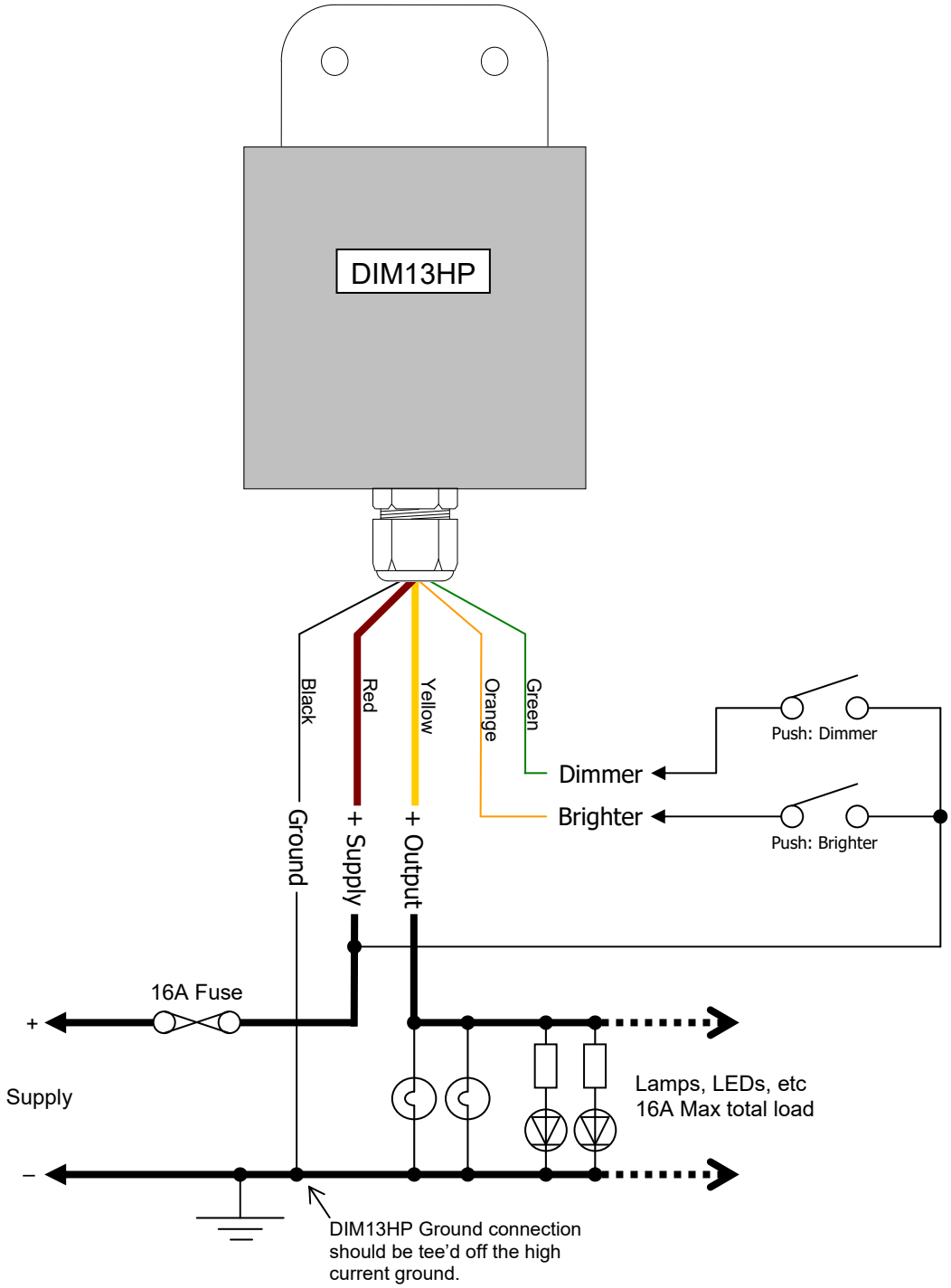
DIM13HP
Black
Red
Yellow
Orange
Green
Ground
+ Supply
+ Output
Dimmer
Brighter
Push: Dimmer
Push: Brighter
16A Fuse
+
Supply
–
Lamps, LEDs, etc
16A Max total load
DIM13HP Ground connection
should be tee'd off the high
current ground.

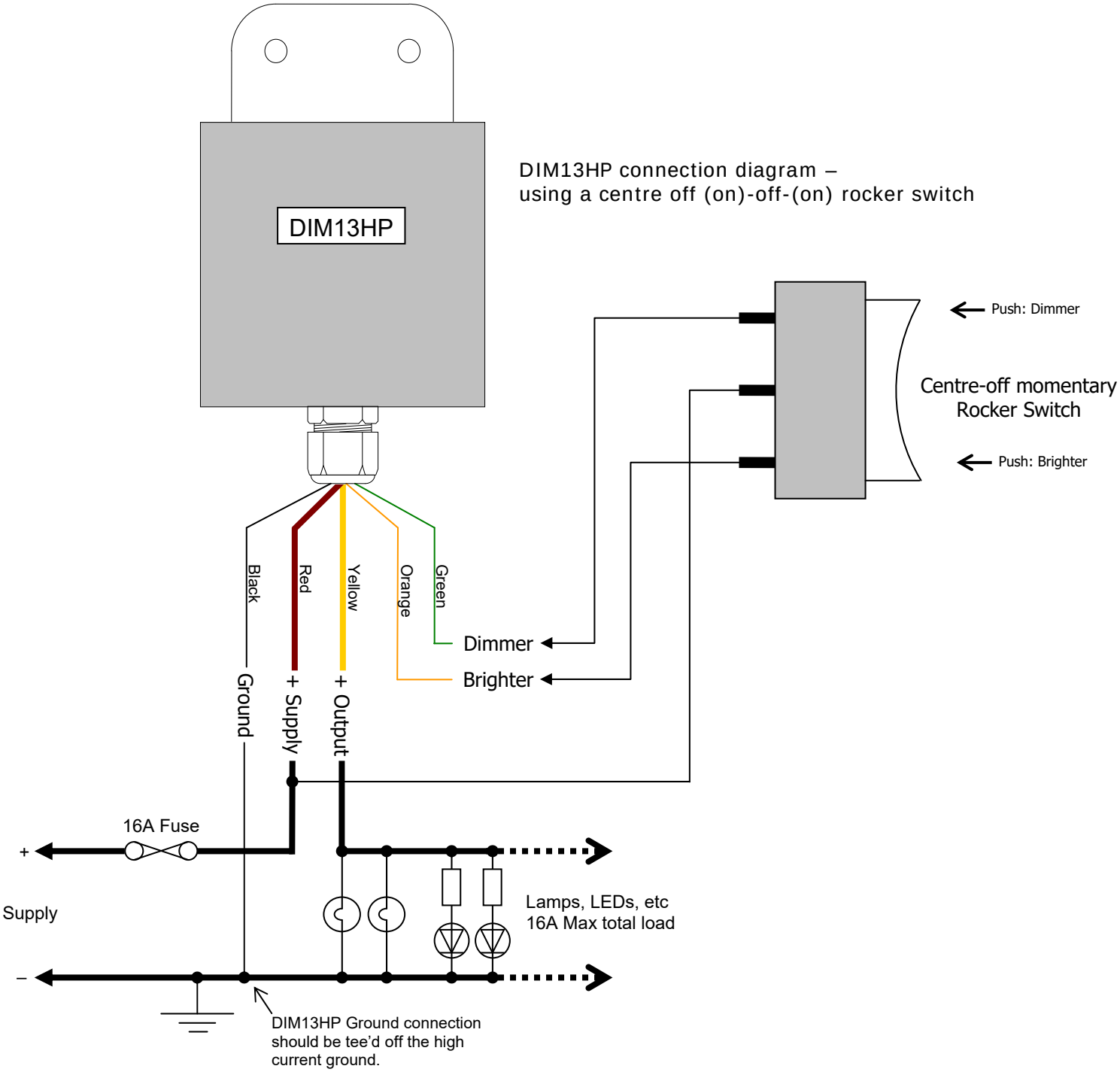
DIM13HP
DIM13HP connection diagram –
using a centre off (on)-off-(on) rocker switch
Push: Dimmer
Centre-off momentary
Rocker Switch
Push: Brighter
Black
Red
Yellow
Orange
Green
Dimmer
Brighter
Ground
+ Supply
+ Output
16A Fuse
+
Supply
–
Lamps, LEDs, etc
16A Max total load
DIM13HP Ground connection
should be tee'd off the high
current ground.