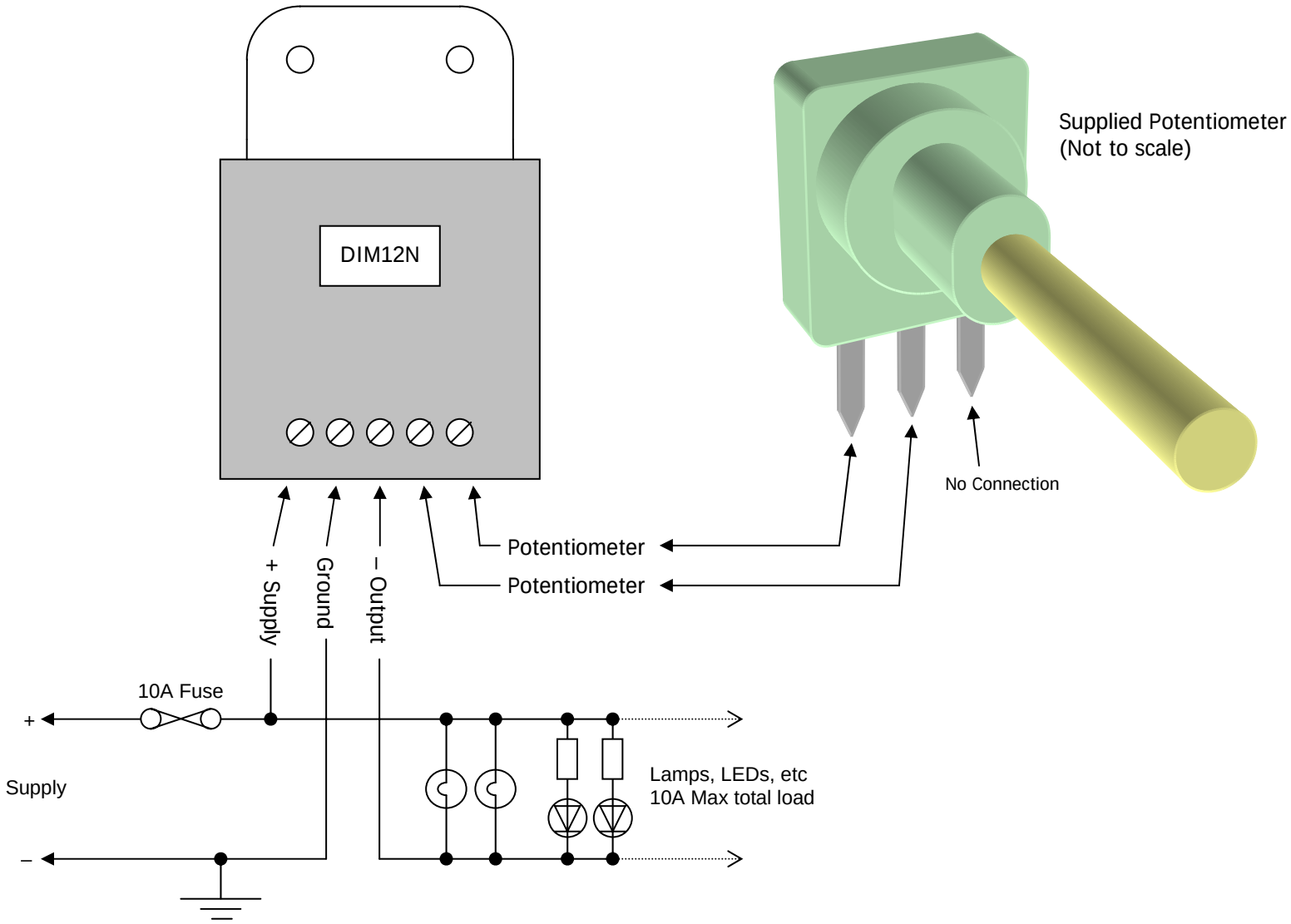
DIM12N
Supplied Potentiometer
(Not to scale)
No Connection
Potentiometer
Potentiometer
+ Supply
Ground
– Output
10A Fuse
+
Supply
–
Lamps, LEDs, etc
10A Max total load

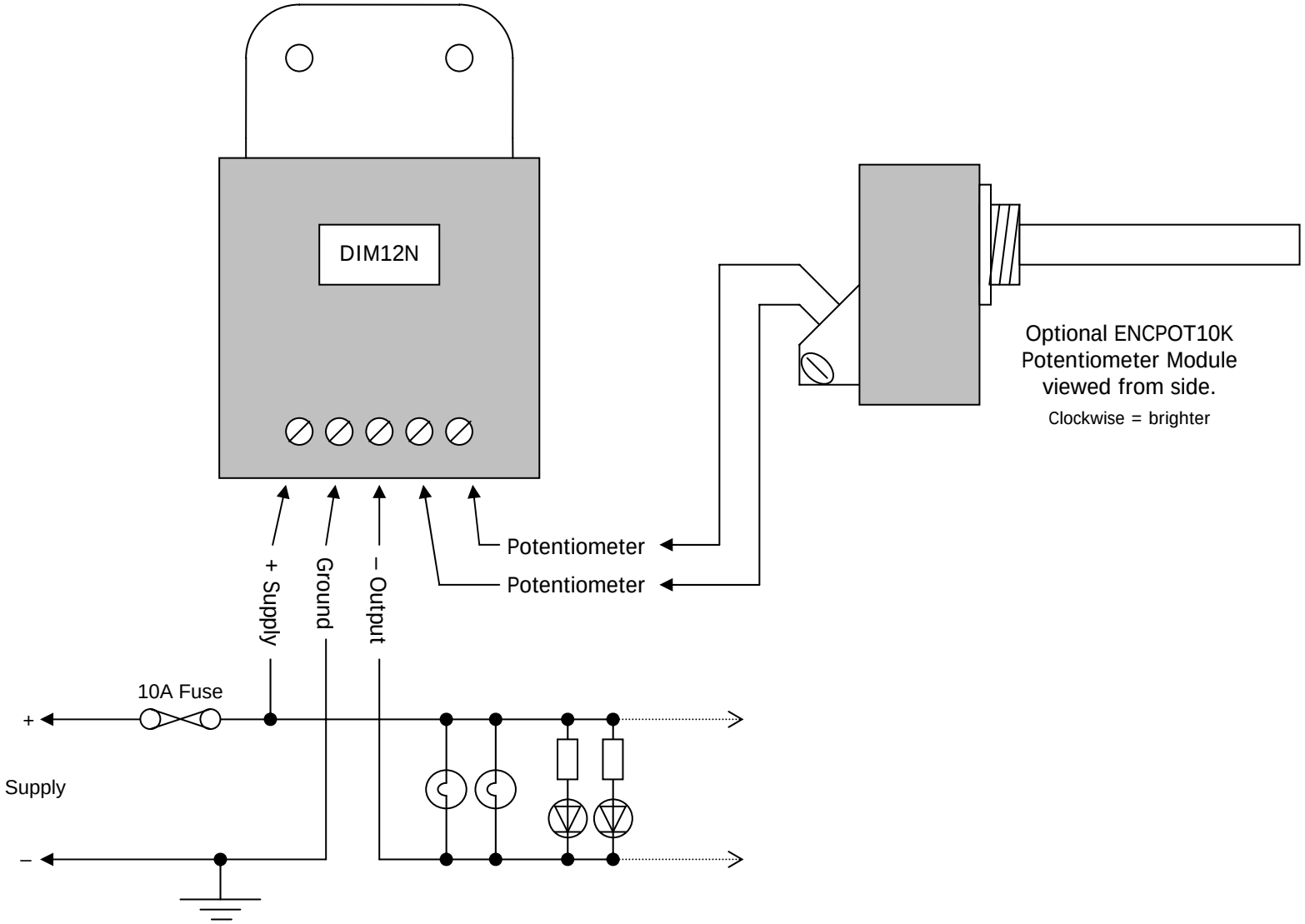
DIM12N
Optional ENCPOT10K
Potentiometer Module
viewed from side.
Clockwise = brighter
Potentiometer
Potentiometer
+ Supply
Ground
– Output
10A Fuse
+
Supply
–